System Implementation of a Gesture Detection Glove for Human-Computer Interaction

Felipe Antunes Quirino, Marcelo Romanssini, Mathias Baldissera and Alessandro Girardi
Computer Architecture and Microelectronics Group - Federal University of Pampa
Alegrete, Brazil
felipeantunesquirino@alunos.unipampa.edu.br

***Abstract*—The use of portable electronic devices, such as smartphones and tablets, is diffused around the world. However, because of the reduced size, the interaction with the human being is difficult, especially the data input by typing on virtual keyboards in the screen. Also, it is necessary to develop new interfaces that allow a more agile human-computer interaction with less effort to the user. This report describes the development of a gesture capture glove capable of recognizing patterns of hand movement and transform them into useful information. The proposed system consists of six accelerometers and six gyroscopes located at the fingertips and over the posterior part of the hand, allowing precise detection of movements in three-dimensional space. A series of applications were developed, such as the recognition of gesture patterns of sign languages, allowing people with some kind of special needs (blind or deaf-mute, for example) to interact efficiently with a computer or smartphone. The glove may replace conventional joysticks and mice devices with the advantage of inserting more degrees of freedom to the control. We also developed a 3D virtual hand model controlled by the glove. The proposed system is cheap and can be implemented with conventional electronics devices available in the market.**

***Index Terms*—glove, HCI, gesture capture**

I. Introduction

The relationship between man and machine is becoming more natural and less complex with the evolution of technology. Devices capable of automatically recognizing user intent facilitate human-machine interaction. This type of technology in recent years has been gaining space in both market and research fields.

The reduced size of portable electronic devices, such as smartphones, smartwatches and tablets have turning it difficult for human beings to interact with small input keyboards [1]. The implementation of a gesture capture glove has the objective of improving the interaction with these devices, since, through gestures, the user can transmit the intention of performing a certain activity or command. This paper describes the development of a gesture detection glove capable of recognizing patterns of hand movement and transform them into useful information. The proposed system consists of six accelerometers and six gyroscopes [2] located at the fingertips and over the posterior part of the hand allowing precise detection of movements in three-dimensional space. The sensors are read by a microcontroller, which processes the values of linear and angular acceleration and sends the information to the final device (a computer, a smartphone or a tablet). Fig. 1 depicts the system structure.

The development of gesture capture devices has been reported previously in the literature. The Smart Glove project [3] uses both three-axes accelerometers and pressure sensors to detected the curves between the fingers and capture movements of the hand. There are also other devices whose purpose is to facilitate human-machine interaction, like Kinect, that consists of a camera that captures three-dimensional images in conjunction with an infrared projector and a monochrome CMOS sensor to create the 3D environment and detect its modifications [4]. The disadvantage of this method is that it depends on the space and luminosity of the environment. The Leap Motion is another interesting recognition device. It recognizes fingers and hand movements by means of infrared LEDs [5]. This equipment does not need any contact with the hand and it is portable. However, it is possible to verify that the gesture capturing by means of accelerometers and gyroscopes presents advantages in relation to other approaches, mainly because of the robustness. There is no interference according to the luminosity, skin color or anatomy from different users. In addition, the ease of use, intuitive operation and freedom of movement in any environment makes a glove a good alternative for automatic hand movement recognition.

II. System Implementation

The hand gesture is captured by six accelerometers and gyroscopes of type MPU 6050, providing linear and angular acceleration data for each finger and for the dorsal area of the hand. Fig. 2 shows the location of the sensors on the glove. The PAMPIUM microcontroller is used for control, performing configuration and capturing sensor data.

Each MPU 6050 has a three-axes accelerometer, responsible for measuring the linear acceleration on the x, y and z-axes, as well as a three-axes gyroscope that measures the angular acceleration over the x, y and z-axes, thus obtaining a good notion of three-dimensional space.

The HC05 is a Bluetooth SPP (Serial Port Protocol) module, designed for transparent wireless serial communication, which makes it easy to interface with the final device.

PAMPIUM is a fully configurable microcontroller designed by our research group. This microcontroller has a general-purpose 16-bit RISC architecture described in System Verilog.

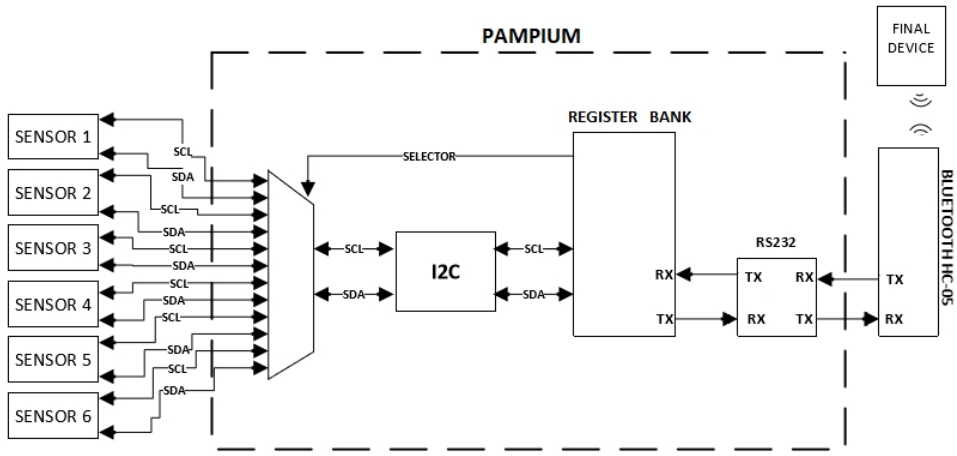

Fig. 1. Block diagram of the gesture capture glove.

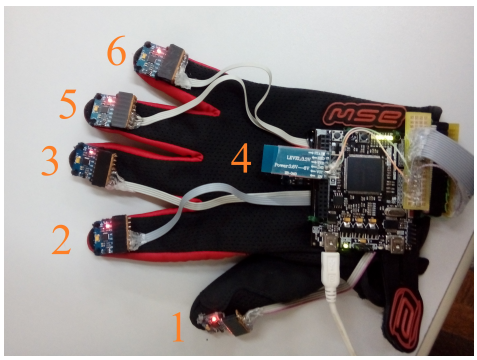

Fig. 2. Prototype of the gesture capture glove with the indication of the location of the six MPU 6050 sensors.

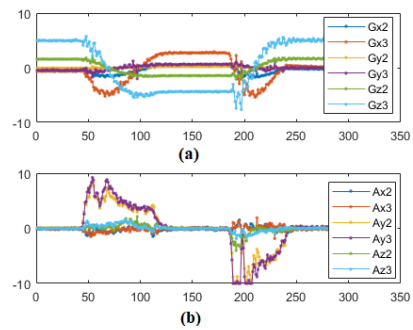

Fig. 3. Data read from sensors 2 and 3. (a) angular acceleration provided by the gyroscopes; (b) linear acceleration provided by the accelerometers.

III. Results and Applications

To test the implemented system, we captured the raw data for the movement of closing and opening the hand. Fig. 3 depicts the data read from accelerometers and gyroscopes located at sensors 2 and 3. It is possible to observe each step of the movement through the three axes of the accelerometers and gyroscopes. From the validated prototype it is possible the development of several applications that use the gesture capture glove features, such as input devices, remote control in virtual reality, movement control for physiotherapy, remote control of robots and drones, simulation of surgeries for medical students training, communication in sign language,etc.

IV. Conclusion

This paper described the development of the entire system of a glove for gesture capturing based on accelerometers and gyroscopes. The communication between the glove and final device is wireless, through Bluetooth protocol, providing a good mobility to the user and an easy connection to devices. The project is fully customizable and includes a PAMPIUM dedicated microcontroller implemented in FPGA. The use of PAMPIUM allowed the I2C and RS-232 communication interface to be connected directly to register bank, allowing easy communication with the sensors, as well as the Bluetooth module.

The developed glove for gesture capture is not affected by the conditions of the environment, such as luminosity, nor by the user characteristics, like hand size or skin color. The six degrees of freedom provided by the glove allows a natural movement detection, which gives it a great potential for using as an input device for human gesture recognition.

References

[1] Longaretti, Dionatas. Implementao de uma Luva Microcontrolada para a Captura de Gestos, Electrical Engineering, Federal University of Pampa, Alegrete, 61 f., 2015.

[2] InvenSense. MPU-6000 and MPU-6050 Product Specification,74HC4051 datasheet, Ago. 2013 [Revised Feb. 2015].

[3] Chouhan, T., Panse, A., Voona, A. and Sameer, S. Smart Glove with Gesture Recognition Ability for the Hearing and Speech Impaired. 2014 IEEE Global Humanitarian Technology Conference - South Asia Satellite (GHTC-SAS), 2014.

[4] J. Han, L. Shao, D. Xu and J. Shotton. Enhanced Computer Vision With Microsoft Kinect Sensor: A Review, IEEE Transactions on Cybernetics,vol. 43, no. 5, pp. 1318-1334, Oct. 2013. R. Nicole, Title of paper with only first word capitalized, J. Name Stand. Abbrev., in press.

[5] McCartney, Robert, Yuan, Jie, Bischof, Hans-Peter. Gesture Recognition with the Leap Motion Controller, Proceedings of the Int'l Conf. IP, Comp. Vision, and Pattern Recognition, IPCV 2015.M. Young, The Technical Writers Handbook. Mill Valley, CA: University Science, 1989.